Radio Interface Cable Assembly

Series 3800 System to Motorola XTL or APX Series Radios
Model No. C38-21RD1 (P/N: 18747G-48)

Product Bulletin

The C38-21RD1 Radio Interface Cable Assembly is designed to facilitate greater ease of installation of David Clark Series 3800 Vehicle Intercom Systems. It is a turnkey assembly allowing direct connection between any Series 3800 Radio Interface Module and mobile radios in the Motorola XTL or APX families, and affording various configuration options (i.e., fixed or variable radio receive audio, transceiver or remote head connections.)

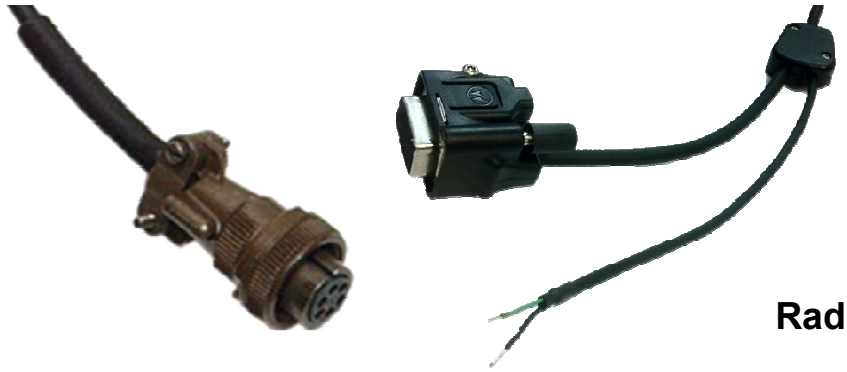

Model C38-21RD1
Radio Interface Cord Assembly

TYPICAL SYSTEM LAYOUT

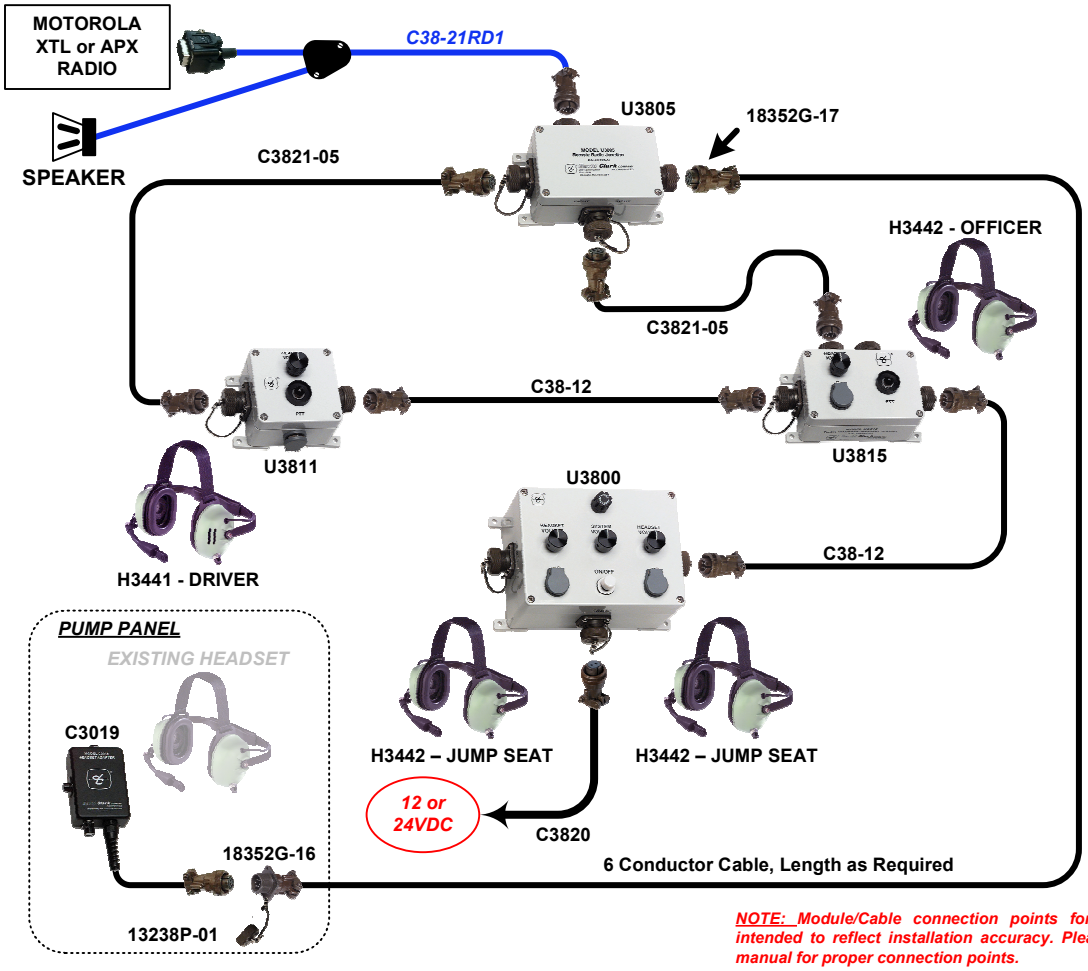

NOTE: Module/Cable connection points for illustration only, not intended to reflect installation accuracy. Please refer to installation manual for proper connection points.

360 Franklin Street, Box 15054, Worcester, MA 01615-0054 • Tel: 508-751-5800 • Fax: 508-753-5827
• Email: sales@davidclark.com • Web site: www.davidclark.com

Made in USA

© 2013 David Clark Company Incorporated

19545P-78 (10-13)